MINIMUM PAVING DIMENSIONS FOR ROAD CUTS

Road Classification	Milling and Asphalt Pavement Resurfacing[1]	Asphalt Pavement Overlay[2]
Alley/Driveway	10’	1’
< 45 MPH	10’	10’
≥45 MPH	10’	30’

NOTES

1. Refer to Standard Drawing No. 2-139 (Page 16) of the Union Township Construction Standards for Excavation and Backfill for further details.
2. Refer to Standard Drawing No. 2-140 (Page 17) of the Union Township Construction Standards for Excavation and Backfill for further details.

DIVISION 2 -- SITE WORK

2F -- EXCAVATION AND BACKFILL

2F.1 General

2F.1.1 Backfill around all structures and in all trenches shall be carried to the grade existing before the installation of the improvement unless otherwise indicated on the drawings or specified hereafter. Backfilling shall follow immediately after construction of the pipe and appurtenances and in no case shall there be a finished installed pipe left uncovered at the end of the work day.

2F.1.2 Each Contractor shall make personal examination of the sites in which the improvements are to be installed and determine for himself the extent and character of any work that may be encountered. All work on the basic contract will be performed on an unclassified basis. Unclassified excavation includes the removal and disposal of rock, boulders, shale, timbers, and logs, concrete, or masonry substructures and other man-made obstructions not shown on the drawings.

2F.1.3 The Contractor shall provide adequate and suitable means of support to prevent failure of any excavation wall and to protect his personnel working in the excavation. The system of support shall be in accordance with current OSHA regulations.

2F.1.4 All open excavation in the construction area shall be adequately barricaded and posted with battery operated warning lights, signs, etc., as required by any local, State, or Federal regulations, or by any published policy by the Owner, or in the absence of any such regulation, to the satisfaction of the Owner's Representative.

2F.1.5 Should the Contractor's operations impair foundations for new or existing structures, he shall provide concrete underpinning piers or supports for such structures at no additional cost to the Owner. The proposed underpinning methods shall be reviewed by the Owner's Representative prior to installation. This, however, shall not relieve the Contractor of his responsibility to safeguard the structures.

2F.1.6 No frozen or excessively wet material will be permitted to be used as backfill. Suitable or selected backfill material shall be kept separated from the unsuitable types. If the Contractor allows suitable backfill material from his excavation to become frozen or excessively wet or mixed with unsuitable material, he shall not be allowed to use it as backfill material and he will be required to bring in material from an outside source at no additional cost to the Owner.

2F.1.7 The Owner's Representative may require that sheeting, (sheet piling) shoring or bracing installed for excavation be left in place in order to protect adjacent facilities or structures. Where such is not required in these specifications or on the drawings, the Contractor will be reimbursed as stipulated in the General Conditions section of these specifications. All other sheeting may be salvaged when the removal of same will not present a hazard to the adjacent facilities or to the safety of the Contractor's personnel. The Contractor shall be fully responsible and liable for any improper or premature removal of sheeting, shoring or bracing and any and all personal or property damages resulting therefrom.

2F.1.8 All excavation materials not used in backfill or final grading operations shall be hauled from the site and properly disposed of by the Contractor at his own expense. He shall not dispose of such material on the site of the work without the permission of the Owner.

2F.1.9 Prevent surface water and subsurface or groundwater from flowing into excavations and from flooding the project site. Do not allow water to accumulate in excavations. Remove water to prevent softening of foundation bottoms and undercutting of footings. Provide and maintain pumps, sumps, suction and discharge lines, and other dewater system components necessary to convey water away from excavations.

2F.2 Excavation and Backfill For Structures

2F.2.1 Excavation for all structures shall be made to the lines and grades as shown on the drawings, and in the case of concrete structures, the excavation shall be made far enough from the final lines of the

structure to afford ample room for setting and removing forms, for dewatering purposes and for other construction needs. Unclassified excavation includes the removal and disposal of rock, boulders, shale, timbers, and logs, concrete or masonry substructures and other man-made obstructions not shown on the drawings.

2F.2.2 Machine excavation shall be permitted to within 3 inches of the bottom of footings, floors and foundations, but the final 3 inches shall be shaped with a hand shovel to insure attainment of correct final grades which are free from loose, shattered, spongy or other unsatisfactory foundation conditions. Any foundation areas which are over-cut or disturbed by the Contractor's operations shall be cleaned and backfilled to foundation grade with concrete conforming to these specifications. Protect excavation bottoms against freezing when atmospheric temperature is less than 35°F.

2F.2.3 Excavation for manholes or similar structures may be performed with non-vertical banks except where such excavation will undermine adjacent facilities or structures, or where such excavation will violate private property outside the property lines established for this work. All inlets and discharge piping within the area of the manhole excavation shall be installed in concrete cradle and the cradle shall extend a minimum of 3 feet and as far into the pipe trench as necessary to protect the pipe to where standard trench conditions are reached.

2F.2.4 Backfill the excavated area with proper compaction control providing minimum percentage of density and appropriate water content for each area classification.

a. Percentage of Maximum Density and Optimum Water Content Requirements: Compact soil to not less than the following percentages of maximum dry density for soils which exhibit a well-defined moisture density relationship, determined in accordance with ASTM D 1557 (Test Method for Laboratory Compaction Characteristics of Soil Using Modified Effort (56,000 ft-lbf/ft^3 [2,7000 kN-m/m^3]), and not less than the following percentages of relative density, determined in

accordance with ASTM D 4253 (Test methods for Maximum Index Density and Unit Weight of Soils Using a Vibratory Table) and ASTM D4254 (Test method for Minimum Index Density and Unit Weight of Soils and Calculation of Relative Density), for soils which will not exhibit a well-defined moisture-density relationship.

1. Structures: Compact top 12 in. of subgrade and each layer of backfill or fill material at 95% maximum dry density at a moisture content that lies within 3% of the optimum moisture content or 80% relative density.

2. Building Slabs and Steps: Compact top 12 in. of subgrade and each layer of backfill or fill material at 95% maximum dry density at a moisture content that lies within 3% of the optimum moisture content or 80% relative density.

3. Lawn or Unpaved Areas: Compact top 6 in. of subgrade and each layer of backfill or fill material at 90% maximum dry density at a moisture content that lies within 3% of the optimum moisture content.

4. Walkways: Compact top 6 in. of subgrade and each layer of backfill or fill material at 95% maximum dry density at a moisture content that lies within 3% of the optimum moisture content or 80% relative density.

5. Pavements: Compact top 12 in. of subgrade and each layer of backfill or fill material at 95% maximum dry density at a moisture content that lies within 3% of the optimum moisture content or 80% relative density for cohesionless granular material.

2F.2.5 Backfill around structures shall not be placed until approval is received from the Owner's Representative at the site. No backfill shall be permitted to be placed against newly poured concrete walls until the concrete has attained the specified 28-day strength. Backfill around tanks and structures shall be placed uniformly in successive layers around

the entire structure to preclude the possibility of non-uniform loading of the exterior wall. In this regard, the maximum permissible differential elevation of backfill at any one time will be 4 ft.

2F.2.6 Compaction of the backfill around structures shall be accomplished by the use of adequately weighted rollers or heavy (10-ton minimum weight) bulldozers, except that within 3 ft of any building wall, only approved mechanical tampers shall be used. Backfill material, which is to be rolled shall be spread and compacted in layers not to exceed 9 in. (loose). Rollers shall be of a design approved by the Owner's Representative. In general, cohesive material will require compacting with a sheepsfoot roller and granular material will require either vibratory steel drum or pneumatic rubber tire roller. The thickness of the layers of backfill material which are spread by bulldozer and compacted by the bulldozer tracks, or which are to be tamped in place, shall not exceed 4 in. No stones larger in any dimension than the thickness of the compacted layers specified will be permitted in the backfill material.

2F.3 Open Excavation and Backfill For Pipelines

2F.3.1 Open Excavation for Pipelines

a. Except where otherwise shown on the plans, all pipelines shall be constructed in open trenches. All excavation shall be unclassified and no extra payment will be made for rock, boulders, shale, timbers, logs, old foundations, masonry, or other natural or artificial materials encountered in the trenching operations. The Contractor shall make personal examination of the locations in which pipelines are to be constructed to determine for himself the extent and character of any rock that may be encountered. No information regarding subsurface conditions along the routes of the pipelines will be given by the Owner, but the Contractor may make his own borings, (subject to him obtaining any required right-of-ways, permits, approvals, etc., for such work) to determine the soil or rock characteristics. The Contractor shall not at any time claim a misunderstanding in regard to depth

or character of the excavation to be made or in the nature of the materials to be encountered.

b. The depth of trenches shall be such that the location of the proposed pipes shall conform with the lines and grades shown on the Plans or as revised and established by the Owner's Representative in the field during construction. The shape of all trenches above the pipe zone, trench sidewall supports both above and within the pipe zone, the construction methods employed, the general protection requirements, the general excavation requirements, the general trenching requirements, and the minimum requirements for trench shoring, shall conform with the regulations set forth under Subpart P, "Excavation, Trenching and Shoring", published as part of the Safety and Health Regulations for Construction by the U.S. Department of Labor, as amended. No trenching excavation work shall be performed which is not in accordance with those regulations.

c. The shape of the trenches in the "pipe zone" (which shall be construed to be that portion of the trench between the trench bottom and an elevation 1 ft above the top of the pipe) shall conform to the configuration identified as "Typical Bedding and Pipe Zone" on Standard No. 2-71. The Contractor is herein advised that if trench widths in the pipe zone exceed the outside diameter of the pipe plus 2 ft, and if the Owner's Representative determines that such excessive widths will result in structural loadings for which the pipe is not designed, he shall be required to bed the pipe on concrete cradle as directed by the Owner's Representative, at no additional cost to the Owner.

d. The Contractor shall shape trenches, which are located adjacent to existing aboveground or underground structures or facilities or in other confined areas, so that such structures and facilities are properly protected against damage or disturbance from settlement or displacement. Adequate sheeting, (sheet piling,) shoring or bracing shall be installed and maintained to provide such protection and the Contractor shall be responsible for all damages resulting to such

proposed and existing structures, pipelines, or facilities as the result of his failure to use and maintain adequate trench wall supports, as well as a result of any other construction activities. The bottoms of all trenches shall be excavated to a depth of 0.5 ft below the bottom of the proposed lines to accommodate the bedding hereinafter specified.

e. Materials excavated from trenches shall be temporarily stored or deposited within the rights-of-way established for this work, unless the Contractor secures, in writing, permission from adjacent property owners to use their property for this purpose.

f. The Owner's Representative may require that sheeting, (sheet piling,) shoring or bracing installed for trench excavation be left in place in order to protect adjacent facilities or structures. Where such is not required in the detailed specifications, or in the drawings, the Contractor will be reimbursed in accordance with the "Changes in Work" section of the General Conditions. All other sheeting may be salvaged when the removal of same will not present a hazard to the adjacent facilities or to the safety of the Contractor's personnel. The Contractor shall be fully responsible and liable for any improper or premature removal of sheeting, (sheet piling,) shoring or bracing and any and all personal or property damages resulting therefrom.

g. The depth of trench for pipelines shall be such that pipe in its installed position, will comply with the lines and grades shown on the drawings, or as revised and established by the Owner's Representative in the field during construction. The minimum cover for pipelines conveying liquid shall be 4 ft. unless otherwise indicated.

h. All open excavation in the construction area shall be adequately barricaded and posted with battery operated warning lights, signs, etc., as required by any local, State, or Federal regulations, or by any published policy by the

Owner, or in the absence of any such regulation, to the satisfaction of the Owner's Representative.

2F.3.2 Pipe Bedding and Pipe Zone Backfill Material

a. All proposed pipelines shall be supported on a crushed stone material approved for pipe line installations such as AASHTO No. 57, or No. 67 (See PennDOT Publication 408, Section 703.2©, Table C) angular graded material approved by the Owner's Representative. Slag and smooth or rounded gravel will not be acceptable. The material shall be placed to a minimum depth of 0.5 feet (minimum after compaction) below the bottom of the pipe and installed to the springline of the pipe for the full width of the trench. For all types of pipe, said sand material shall further be required to be placed in the entire pipe zone, defined as all that portion of the trench between the trench bottom and an elevation one (1) foot above the top of the pipe in its installed position. The backfilling around and over the pipe shall be carefully done by hand and tamped with suitable tools of approved weight to a point one (1) foot above the top of the pipe. This material shall be placed in layers four (4) inches thick, each layer being thoroughly tamped and compacted in place. The bedding and backfill material shall then be choked as required by the Owner's Representative with approved material in sufficient quantities to prevent migration of the surrounding soils into the bedding and backfill. The material shall be placed in the pipe zone in such a manner as to not disturb, displace, or otherwise misalign the installed pipelines.

b. For ferrous metal pipelines or casings, cinders or slag with an acid content shall not be used as backfill material in the pipe zone. Where such pipelines are carried through cinders, the Contractor shall supply a clay encasement for the entire pipe zone, plus nine (9) inches minimum below the invert of the pipe. The Contractor shall include the cost of such encasement in his unit price bid.

2F.3.3 Backfill Material Above the Pipe Zone

a. Material excavated during trenching and other construction operations shall be used as backfill between the top of the pipe zone and the bottom of the topsoil or other unimproved surface treatments (subject to material meeting all compaction requirements). Said material shall be used for the full depth of trench to the finished ground surface where the ground is unimproved. If the material excavated from the trench is not clean earth or rock, and is not free of wet, frozen, or organic materials, and is not suitable for backfilling as determined by the Owner's Representative, the Contractor shall provide suitable material from other sections of the work or from borrow and shall properly dispose of unused material at no additional cost to the Owner. If the material is not suitable as a result of moisture content, the Contractor may perform moisture conditioning to achieve the proper level prior to compaction of the material, or obtain other suitable material at no additional cost to the Owner. Moisture conditioning may include sprinkling, harrowing, discing, or whatever other methods are necessary to achieve a uniform moisture level within the specified limits. Backfill containing rock up to six (6) inches in maximum dimension may be used for trench backfill. If the excavated material contains oversize rock, the oversize material shall be removed prior to placing backfill in the trench, at no additional cost to the Owner.

b. Where trenches are located in roads, streets, driveways, alleys, parking lots, or areas subject to vehicular traffic (excluding shoulders), backfill shall be full depth No. 2A crushed stone or gravel coarse aggregate complying with PennDOT Publication 408, Section 703.2. Backfill to the full depth of trench above the pipe zone to the bottom of the road, street, parking lot or driveway. Thoroughly compact backfill in layers not exceeding 8 inches in thickness to non-movement of the backfill material.

c. The cost of all backfill required above the pipe zone shall be included in the unit price bid for the pipe installation.

d. In the event that the Contractor desires to employ the use of special vibratory and/or heavy-duty machinery for that purpose, such methods will be approved by the Owner's Representative, subject to demonstration by the Contractor that satisfactory end results can be attained. In any event, restoration of trench settlements occurring within two years after completion of the work shall be the responsibility of the Contractor at no extra cost to the Owner. Particular care shall be exercised by the Contractor in backfilling trenches located along or crossing streets, street berms, roadways, parking areas, and other traveled ways, such that the resumption of normal traffic patterns will occur reasonably soon after the pipe in those areas has been installed.

e. Trenches located in shoulders, except otherwise directed in the field may be backfilled with approved excavated material.

2F.3.4 Special Backfill Material for Pipeline Trenches

a. Where muck, quicksand, soft clay, swampy or other material is encountered in the trench bottom, which in the opinion of the Owner's Representative, is unsuitable for pipe foundation subgrade or backfill, such material shall be removed to a depth satisfactory to the Owner's Representative. The trench shall then be backfilled to grade with acceptable Owner approved material, mechanically compacted in successive layers. For the removal and replacement of such unsuitable materials, to a depth greater than the 6 in. below the bottom of the pipe, and when authorized by the Owner's Representative, the Contractor shall be reimbursed on the basis of the invoiced unit cost of the delivered material times the measured unit quantity installed times a multiplier of 1.50. If the material in the trench bottom is determined to be unsuitable as a result of the Contractor's failure to control water or prevent ponding of water in the excavation, the

unsuitable material shall be removed and backfilled with suitable Owner approved material to grade at no additional cost to the Owner.

b. Payment quantities for this special backfill material above or below the pipe zone shall be computed for only that respective portion of the trench noted as "Special Backfill" on Standard No. 2-71.

2F.4 Proctor Density Tests

2F.4.1 Subject to field conditions, and at the discretion of the Owner's Representative modified Proctor Density Tests may be ordered throughout the course of the project to determine the standard density of material. The Owner's Representative may test any lift of backfill at any time, location, or elevation. These tests, when required by the Owner's Representative, shall be performed by an independent certified testing laboratory approved by the Owner's Representative. The Proctor Density Tests shall be performed in accordance with ASTM D 1557, unless otherwise specified.

2F.4.2 The Contractor shall include all costs required for said tests including delivery of said certified results to the Owner's Representative in the total price bid for this Contract.

2F.5 Compaction Tests

2F.5.1 Subject to field conditions, installation procedures, and at the discretion of the Owner's Representative Compaction Tests may be ordered throughout the course of the project to verify the in-place density of compacted soil backfill. The Owner's Representative may test any lift of backfill at any time, location, or elevation. These tests, when required by the Owner's Representative, shall be performed at locations as determined by the Owner's Representative in the field. These tests shall be performed by an independent certified testing laboratory approved by the Owner's Representative. The in-place density tests shall be performed in accordance with ASTM D1556 or by nuclear methods designated as ASTM D2922, unless otherwise specified.

2F.5.2 Subject to unsatisfactory test results not meeting specification compaction requirements, the Owner's Representative reserves the right to order additional tests at no additional cost to the Owner until satisfactory test results are reached in the affected areas.

2F.6 Anchoring and Blocking Underground Pressure Lines

2F.6.1 All bends in excess of 10 degrees, plugs, caps, tees, and wye branches along pipelines shall be adequately blocked or anchored to prevent the lines from pulling apart under pressure. Blocking shall conform to Standard No. 2-72. Lugged fittings and tie rods, clamps, collars, restrained joints and anchoring fittings may be substituted in lieu of blocking after having received approval from the Owner's Representative. Concrete used for blocking and anchoring pipelines shall be as described in the Concrete Section of these specifications.

2F.6.2 Concrete anchors are required to be furnished and installed at the locations shown on the drawings or profiles in accordance with details on the drawings and as directed and approved by the Owner's Representative. Said anchor material shall consist of concrete as described in these specifications.

2F.7 Blasting

2F.7.1 No blasting shall be permitted on this project.

2F.8 Disposition of Unsatisfactory and/or Excess Excavated Material

2F.8.1 Where the Contractor encounters boulders, rock, swampy, or other materials determined by the Owner's Representative to be unsatisfactory for use as backfill, the same shall be removed from the site and properly disposed of by the Contractor. Broken concrete, broken asphalt, and other debris resulting from pavement or sidewalk removal, excavated rock in excess of any amount permitted to be and actually installed in the trench backfill, junk, and all other debris encountered in excavation work and other similar waste materials, shall also be properly disposed of off the site of the project. All excess material remaining

after completion of trench backfilling, and all excavated material replaced by special backfill, shall be similarly properly disposed of by the Contractor. No special payment will be made for this work. All costs for this work shall be included in the total price bid for this Contract.

ALL HOT MIX ASPHALT (HMA) SHALL BE SUPERPAVE ASPHALT MIXTURE DESIGN

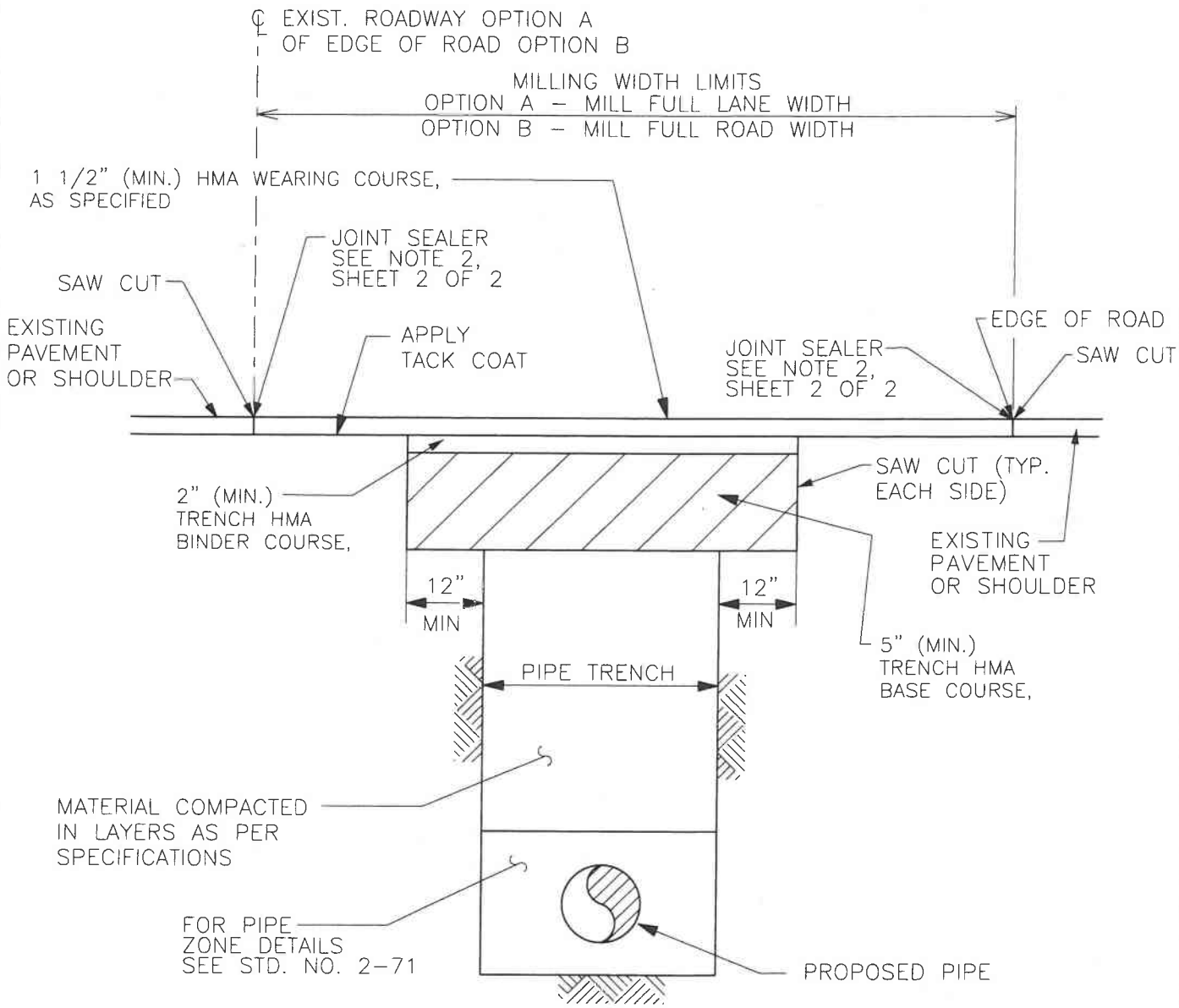

FULL LANE WIDTH (OPTION A) OR FULL ROAD WIDTH (OPTION B)
HMA WEARING COURSE, PG 64-22, 9.5 MM MIX SHALL BE AS THICK
AS EXISTING OR 1 1/2" (MIN.) AFTER COMPACTION, WHICHEVER IS GREATER

TRENCH HMA BINDER COURSE, PG 64-22, 19 MM MIX
SHALL BE AS THICK AS EXISTING OR 2" (MIN.) AFTER COMPACTION,
WHICHEVER IS GREATER

TRENCH HMA BASE COURSE, PG 64-22, 25 MM MIX
SHALL BE AS THICK AS EXISTING OR 5" (MIN.), WHICHEVER IS GREATER

MILL THE EXISTING ROAD SURFACE TO A MINUMUM DEPTH OF 1 1/2"

REPAINT ALL PAVEMENT MARKINGS.

CHESTER ENGINEERS

DESIGNER:	ENGINEER:	DATE:	SHEET:	STD. NO.
RGK	WJK	07/07	1 OF 2	2-139
CHECKER:	APPR. BY:			
ACS	WJK			

PIPE TRENCH AND FULL LANE/FULL ROAD WIDTH MILLING AND ASPHALT PAVEMENT RESURFACING

STD: C-0801-11X8A
INTL REF: M:\cade\STD_drawings\Div 2\2-139.DGN
BAR = 1" AT PLOT SCALE

07/30/2007/09:35:50 AM

ALL HOT MIX ASPHALT (HMA) SHALL BE SUPERPAVE ASPHALT MIXTURE DESIGN
* TRANSVERSE LIMITS OF MILLING AND RESURFACING WORK OPTION A OR B

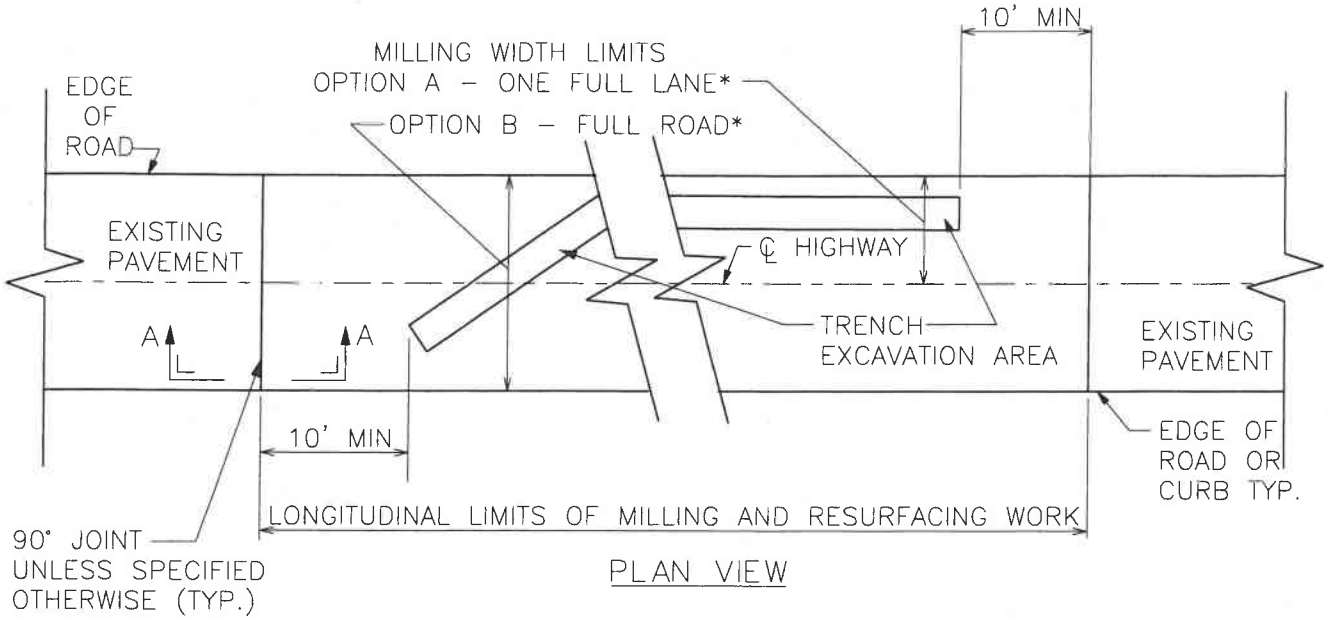

PLAN VIEW

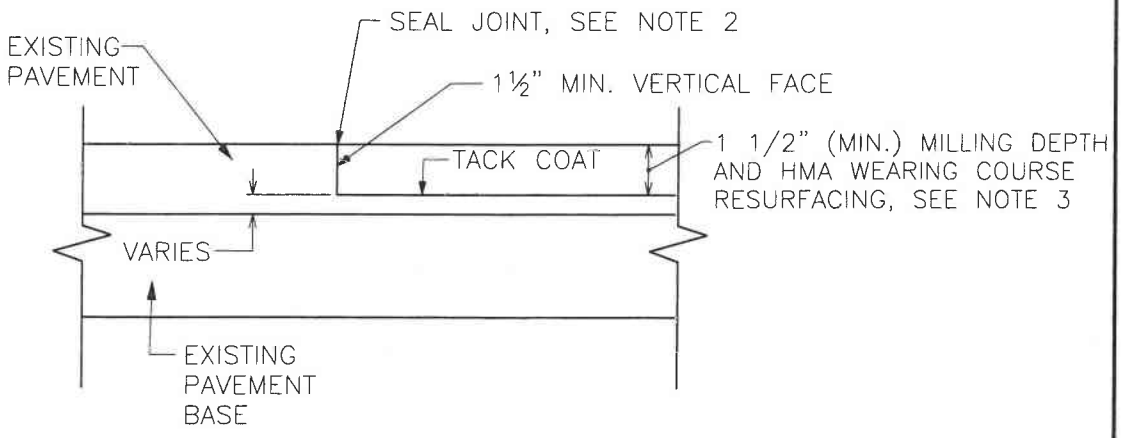

NOTCH DETAIL
SECTION A-A

NOTES:

1. EXISTING SURFACE LINE TO BE MAINTAINED BY FINAL RESURFACING OF WEARING COURSE.
2. SEAL ALL JOINTS ALONG CURB LINES, NOTCH LINES AND AROUND UTILITY \ OPENINGS WITH SAME ASPHALT CEMENT AS USED IN THE HMA WEARING COURSE.
3. WEARING COURSE (HMA WEARING COURSE, PG 64-22, 9.5 MM MIX) SHALL BE AS THICK AS EXISTING OR 1 1/2" (MIN.) AFTER COMPACTION, WHICHEVER IS GREATER
4. REPAINT ALL PAVEMENT MARKINGS.

CHESTER ENGINEERS

DESIGNER:	ENGINEER:	DATE:	SHEET:	STD. NO.
RGK	WJK	07/07	2 OF 2	2-139
CHECKER: ACS	APPR. BY: WJK			

PIPE TRENCH AND FULL ROAD/ONE LANE WIDTH MILLING AND ASPHALT PAVEMENT RESURFACING

STD: C-0801-11XBA
INTL REF: M:\cade\STD_drawings\Div 2\2-139.DGN
BAR = 1" AT PLOT SCALE

07/30/2007/09:36:45 AM

* ALL HOT MIX ASPHALT (HMA) SHALL BE SUPERPAVE ASPHALT MIXTURE DESIGN

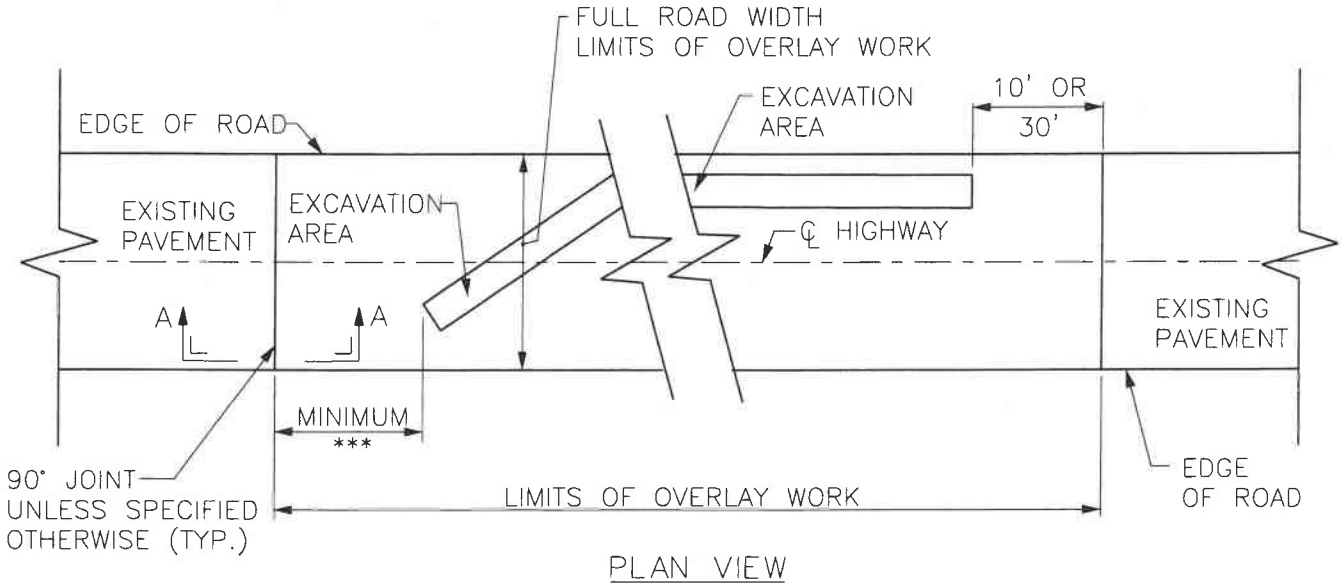

PLAN VIEW

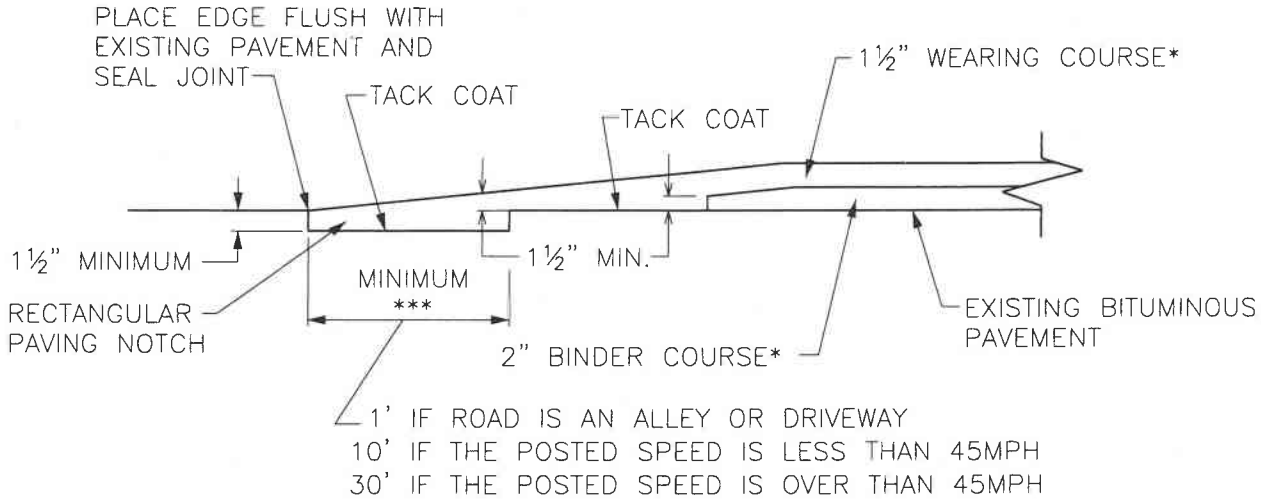

NOTCH DETAIL SECTION A-A

NOTES:

1. RAISE ALL EXISTING UTILITY ACCESS LID AND MANHOLE COVERS TO NEW GRADE.
2. SEAL ALL JOINTS ALONG CURB LINES, NOTCH LINES AND AROUND UTILITY OPENINGS, WITH SAME ASPHALT CEMENT USED IN HMA WEARING COURSE.
3. REPAINT ALL PAVEMENT MARKINGS.
4. WEARING COURSE (HMA WEARING COURSE, PG 64-22, 9.5 MM MIX) SHALL BE AS THICK AS EXISTING OR 1 1/2" (MIN.) AFTER COMPACTION, WHICHEVER IS GREATER
5. BINDER COURSE (HMA BINDER COURSE, PG 64-22, 19 MM MIX) SHALL BE AS THICK AS EXISTING OR 2" (MIN.) AFTER COMPACTION, WHICHEVER IS GREATER

CHESTER ENGINEERS

DESIGNER:	ENGINEER:	DATE:	SHEET:	STD. NO.
RGK	WJK	02/07	1 OF 1	2-140
CHECKER: ACS	APPR. BY: WJK			

FULL ROAD WIDTH ASPHALT PAVEMENT OVERLAY

STD: C-0801-11X8A

INTL REF: M:\code\STD_drawings\Div 2\2-140.DGN

BAR = 1" AT PLOT SCALE

2/7/2007/8:45:02 AM

FLEXIBLE PAVEMENT RESTORATION

FIGURE 7-3

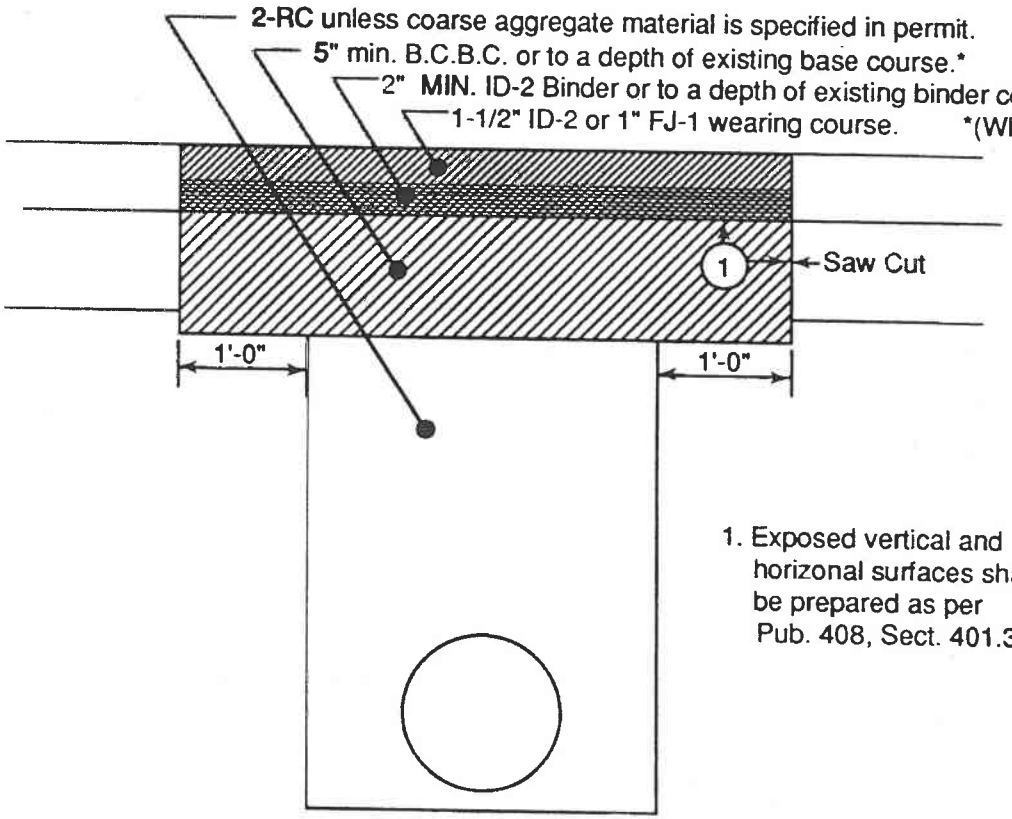

1. Exposed vertical and horizonal surfaces shall be prepared as per Pub. 408, Sect. 401.3(f).

FIGURE 7-4

RIGID PAVEMENT RESTORATION

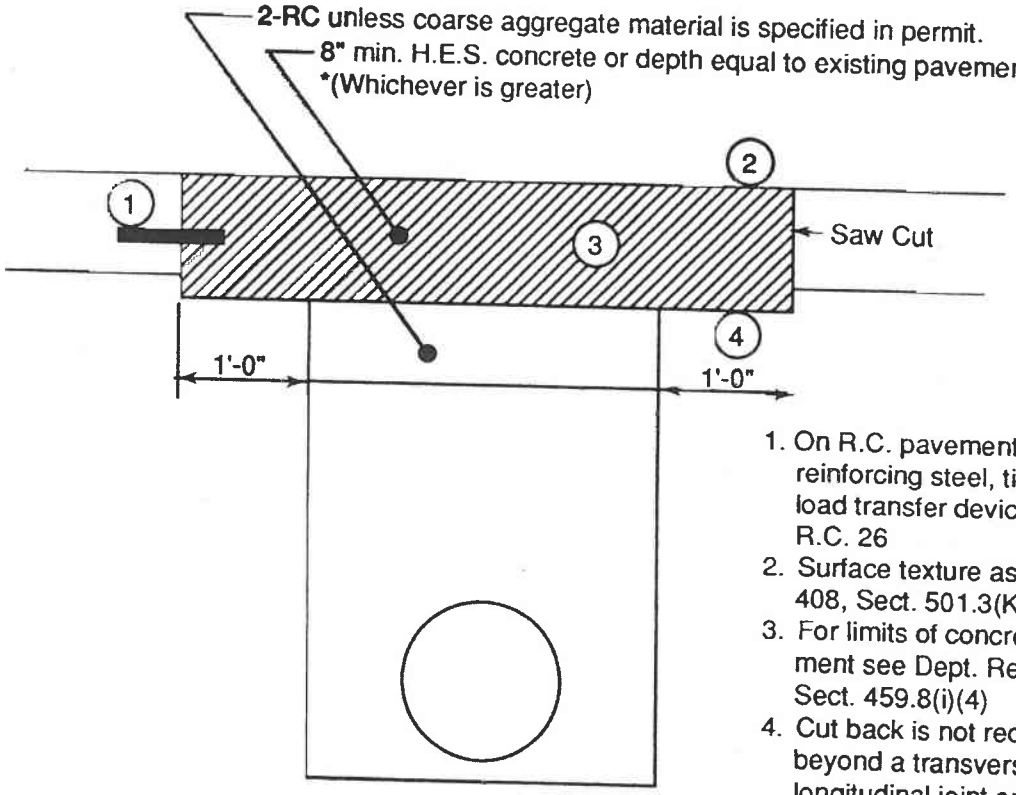

1. On R.C. pavement, place reinforcing steel, tie bolts, and load transfer devices as per R.C. 26
2. Surface texture as per Pub. 408, Sect. 501.3(K)
3. For limits of concrete replacement see Dept. Reg. 459, Sect. 459.8(i)(4)
4. Cut back is not required beyond a transverse or longitudinal joint or curb.

FIGURE 7-5

RIGID PAVEMENT RESTORATION

(BITUMINOUS OVERLAY OR PLAIN CEMENT BASE COURSE)

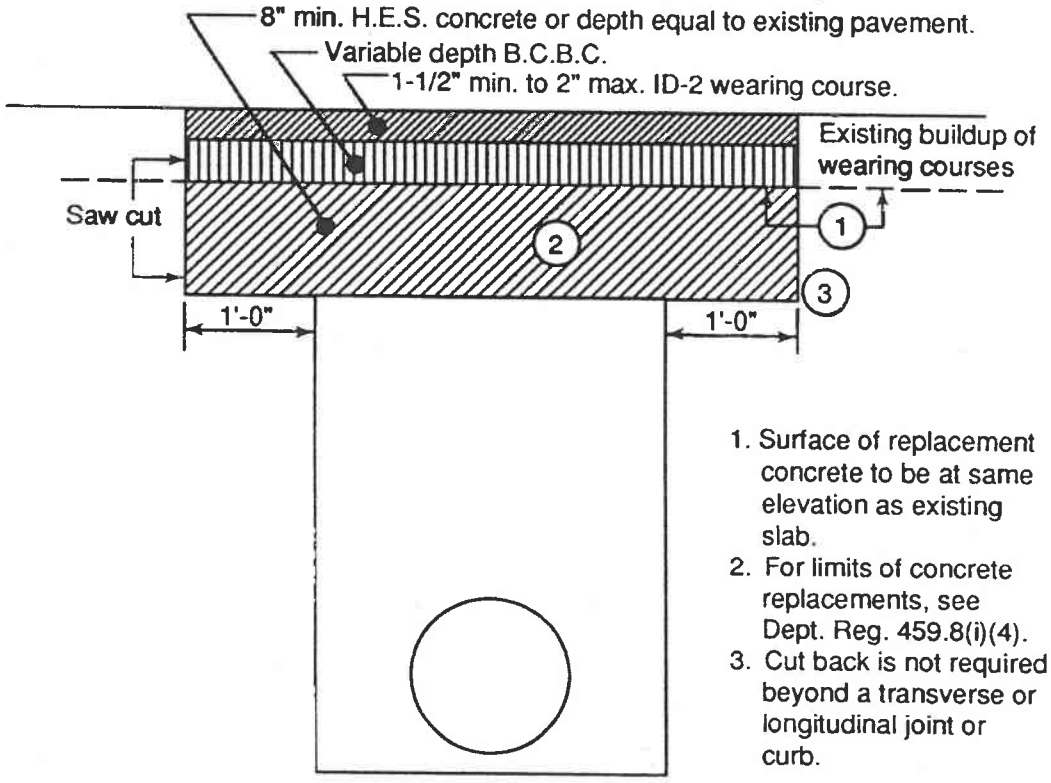

1. Surface of replacement concrete to be at same elevation as existing slab.
2. For limits of concrete replacements, see Dept. Reg. 459.8(i)(4).
3. Cut back is not required beyond a transverse or longitudinal joint or curb.

FIGURE 7-6

TEMPORARY RESTORATION

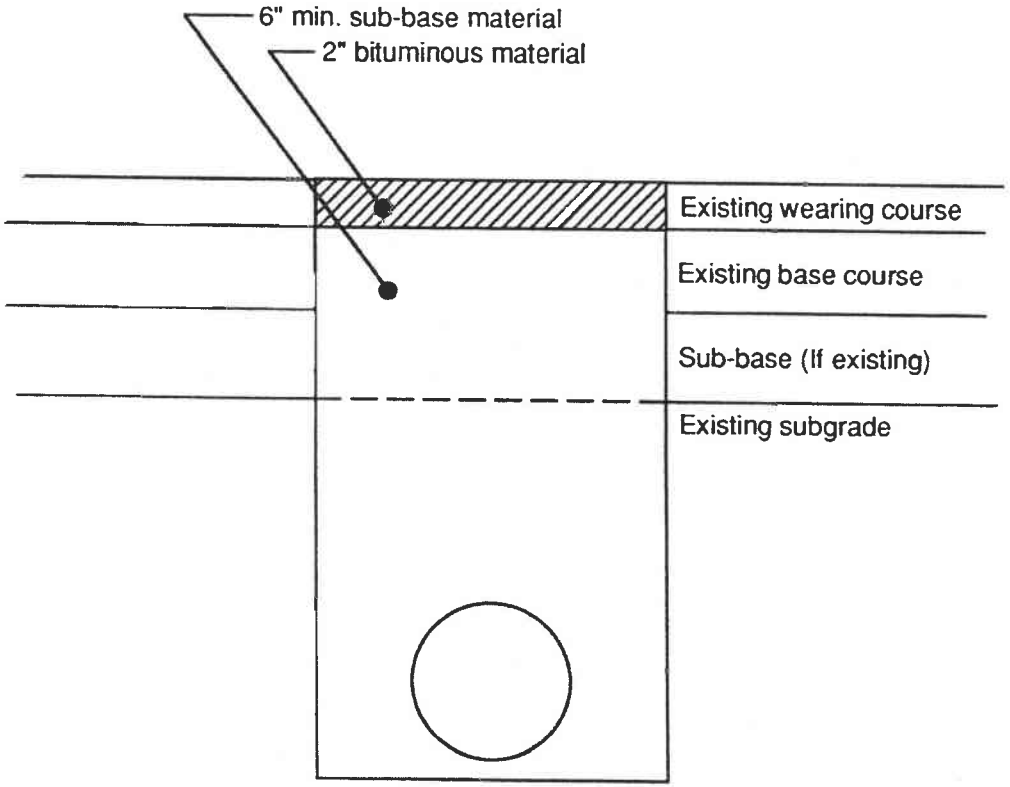

FIGURE 7-7

TYPICAL BACKFILL SECTION

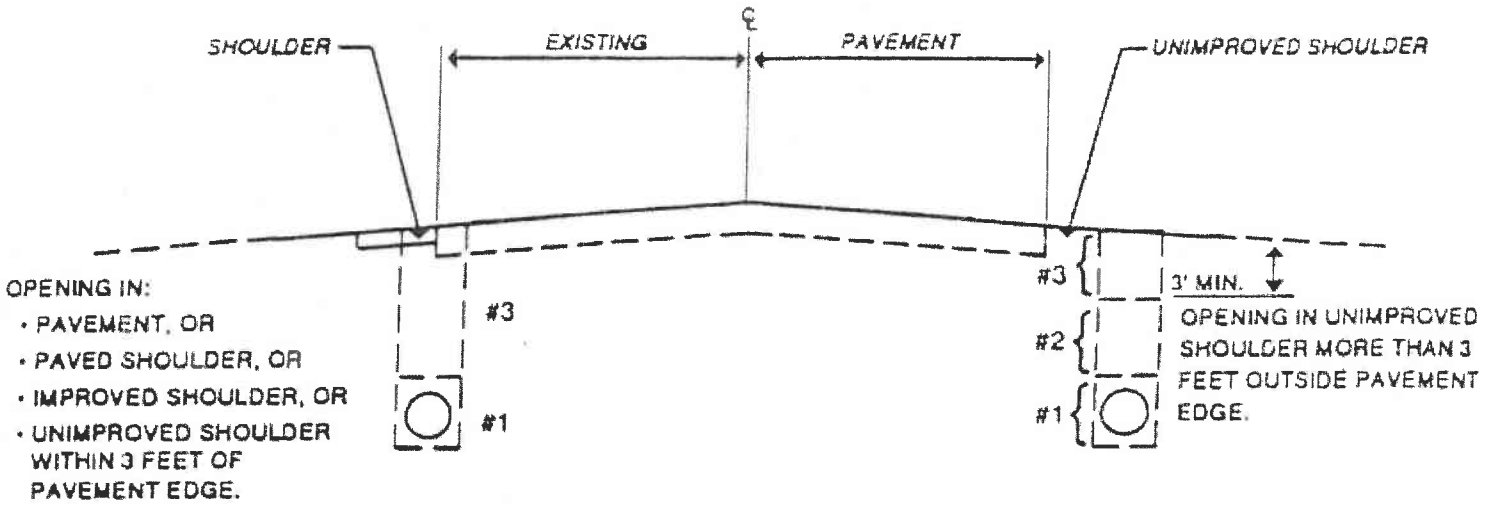

#1 PLACE FINE AGGREGATE OR GRANULAR MATERIAL UP TO 1 FOOT OVER TOP OF THE FACILITY, AND COMPACT IN 4" LOOSE LIFTS.

#2 PERMIT MAY AUTHORIZE RETAINED SUITABLE MATERIAL, IN LIEU OF **#3 BELOW**, AND COMPACT IN ACCORDANCE WITH DEPARTMENT REGULATION 459.8(g).

#3 PLACE SELECT GRANULAR MATERIAL (2RC) UNLESS COARSE AGGREGATE MATERIAL IS SPECIFIED IN PERMIT, AND COMPACT (IN 4" LOOSE LIFTS WITH MECHANICAL TAMPER OR 8" LOOSE LIFTS IF VIBRATORY COMPACTION EQUIPMENT IS USED) TO 100% OF THE DETERMINED DRY WEIGHT DENSITY.

NOTE: *For openings behind curb or outside shoulder, suitable material will normally be authorized full depth.*

Ⓐ SUPERPAVE ASPHALT MIXTURE DESIGN, HMA WEARING COURSE, 1½" DEPTH (MINIMUM)

Ⓑ SUPERPAVE ASPHALT MIXTURE DESIGN, HMA BINDER COURSE, 2½" DEPTH (MINIMUM)

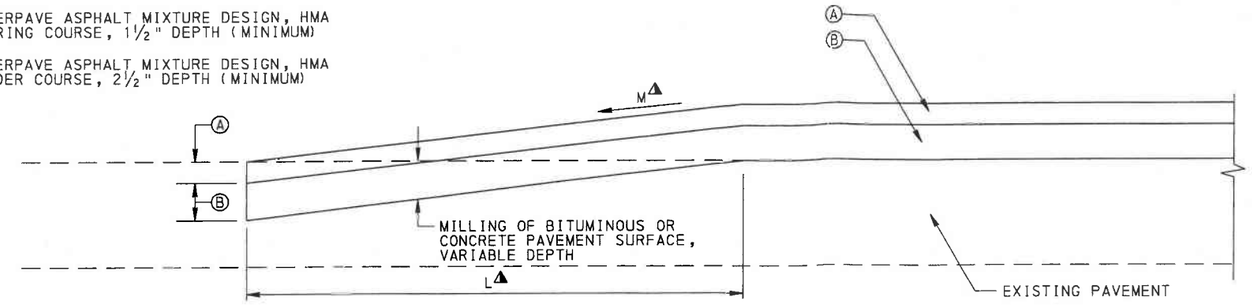

▲ SEE TABLE A FOR DIMENSIONAL REQUIREMENTS.

OVERLAY TRANSITION WITH PAVING NOTCH ON CONCRETE AND BITUMINOUS PAVEMENTS

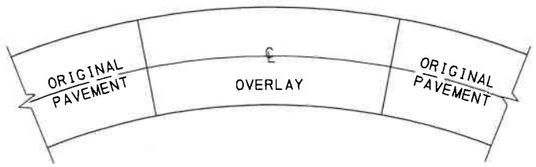

PLAN VIEW

SUPERELEVATION SECTION

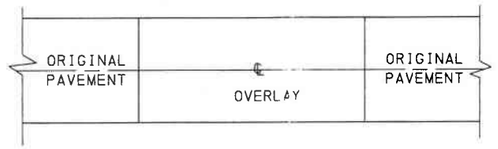

PLAN VIEW

TANGENT SECTION
TWO-LANE, TWO-WAY TRAFFIC AND
TWO-LANE DIRECTIONAL

OVERLAY TRANSITIONS

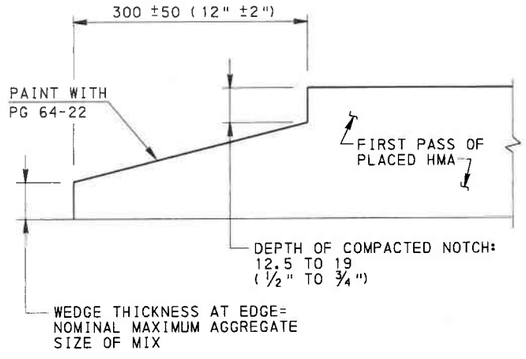

LONGITUDINAL NOTCHED WEDGE JOINT

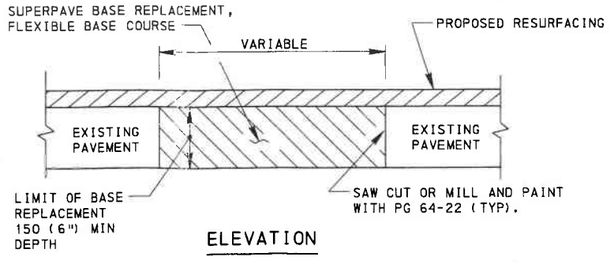

ELEVATION

SUPERPAVE BASE REPLACEMENT

SEE NOTES 5, 6, 7 AND 8 THIS SHEET.

TABLE A

FUNCTIONAL CLASSIFICATION	SLOPE M (MAXIMUM)	PAVING NOTCH L (MINIMUM)
INTERSTATE AND OTHER LIMITED ACCESS FREEWAYS	0.17% (1" IN 50')	15 m (50')
ARTERIALS > 70 km/h (45 mph) SEE NOTE 2.	0.28% (1" IN 30')	9 m (30')
ARTERIALS ≤ 70 km/h (45 mph) SEE NOTE 2	0.33% (1" IN 25')	7.5 m (25')
COLLECTORS AND LOCAL ROADS	0.33% (1" IN 25')	7.5 m (25')
CROSS STREETS SEE NOTE 1	8.33% (1" IN 12")	0.3 m (1')
DRIVEWAYS	8.33% (1" IN 12")	NO NOTCH

TABLE B

NOMINAL MAXIMUM AGGREGATE SIZE		
MIX	METRIC	ENGLISH
SP9.5 (ID-2W, ID-2W H.D.)	9.5	⅜"
SP12.5	12.5	½"
SP19 (ID-3B, ID-2B, ID-2B H.D.)	19	¾"

NOTES

1. USE HIGHER APPROPRIATE CRITERIA IF A CROSS STREET HAS A FUNCTIONAL CLASSIFICATION OF COLLECTORS AND LOCAL ROADS OR HIGHER.
2. USE 85TH PERCENTILE SPEED, IF AVAILABLE. OTHERWISE, USE THE POSTED SPEED.
3. PLACE EDGE FLUSH WITH EXISTING PAVEMENT AND SEAL AS SPECIFIED IN PUBLICATION 408, SECTION 409.3(k)3.
4. CONSTRUCT FLEXIBLE BASE REPLACEMENT IN ACCORDANCE WITH THE REQUIREMENTS OF PUBLICATION 408, SECTION 316.
5. PREPARE EXPOSED VERTICAL AND HORIZONTAL SURFACES AS PER PUBLICATION 408, SECTION 409.3(k).
6. FOR NON-OVERLAY APPLICATIONS, THE TOP 40 (1½") OF BASE REPLACEMENT WILL BE SUPERPAVE WEARING COURSE.
7. FOR RESTORATION OF RIGID PAVEMENT, REFER TO PUBLICATION 408, SECTION 516 AND RC-26M.
8. FOR SUPERPAVE BASE REPLACEMENT, SAW CUTTING, EXCAVATION, HAULING AND DISPOSAL, BITUMINOUS TACK COAT, BITUMINOUS MATERIAL, AND SEALING OF THE JOINTS ARE CONSIDERED AS INCIDENTAL.
9. ALL DIMENSIONS ARE IN MILLIMETERS UNLESS OTHERWISE NOTED. U.S. CUSTOMARY UNITS IN () PARENTHESES.

NOTE: EITHER ALL METRIC OR ALL ENGLISH VALUES MUST BE USED ON PLANS. METRIC AND ENGLISH VALUES SHOWN MAY NOT BE MIXED.

COMMONWEALTH OF PENNSYLVANIA
DEPARTMENT OF TRANSPORTATION
BUREAU OF DESIGN

OVERLAY TRANSITIONS AND PAVING NOTCHES

RECOMMENDED JUN. 1, 2010	RECOMMENDED JUN. 1, 2010	SHT 1 OF 1
R. Wood Talley	Gene E. Hyam	RC-28M
CHIEF, HWY. QA DIVISION	DIRECTOR, BUREAU OF DESIGN	

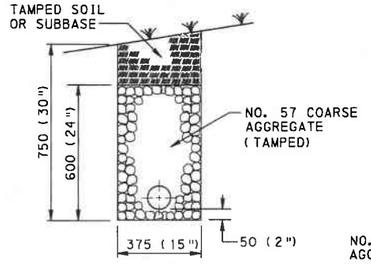

TYPE I BACKFILL
ROCK AND SHALE

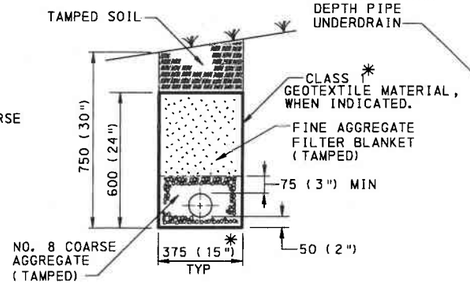

TYPE II BACKFILL
SOIL

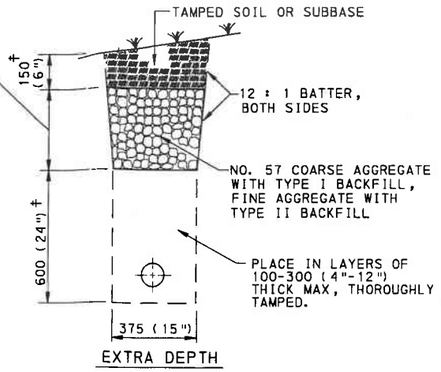

EXTRA DEPTH

PIPE UNDERDRAIN

NOTES

1. PROVIDE MATERIALS AND CONSTRUCT AS SPECIFIED IN PUBLICATION 408, SECTION 610 FOR PIPE UNDERDRAIN AND PAVEMENT BASE DRAIN.
2. PROVIDE BITUMINOUS PAPER WHEN GEOTEXTILE MATERIAL IS NOT INDICATED.
3. FOR THE SUBSURFACE DRAIN OUTLET PROVIDE MATERIALS MEETING THE REQUIREMENTS OF PUBLICATION 408, SECTION 615. A MINIMUM OF 600 (24") OF COVER OVER THE PIPE IS REQUIRED FOR OUTLETS CONSTRUCTED WITH THE SAME MATERIAL AS THE UNDERDRAIN OR PAVEMENT BASE DRAIN.
4. USE THE WIRE MESH SHIELD IN AREAS NOT SUBJECT TO MOWING OR DAMAGE BY EQUIPMENT OR VEHICLES. REFER TO RC-31M FOR CONSTRUCTION OF ENDWALLS FOR OUTLET PROTECTION.
5. LONGITUDINAL BASE DRAINS MAY RUN CONTINUOUSLY THROUGH TWO (2) OUTLETS. USE A 45° ELBOW ON THE THIRD OUTLET OF A SERIES. BEGIN THE DRAIN FOLLOWING THE THIRD OUTLET WITH AN END CAP.
6. ALL DIMENSIONS ARE IN MILLIMETERS UNLESS OTHERWISE NOTED. U.S. CUSTOMARY UNITS IN () PARENTHESIS.

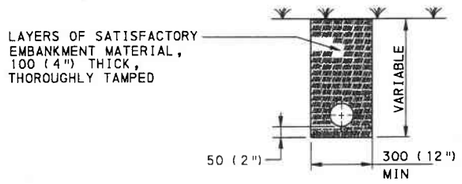

EXCAVATION OVER 900 (36") IN DEPTH AND FOR A MAXIMUM WIDTH OF 600 (24") IS PAYABLE AS CLASS 4 EXCAVATION. USE SUBSURFACE DRAIN OUTLETS FOR ALL PIPE UNDERDRAIN AND PAVEMENT BASE DRAINS.

SUBSURFACE DRAIN OUTLETS
(SEE DETAIL A.)

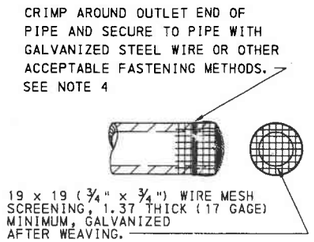

DETAIL A
WIRE MESH SHIELD

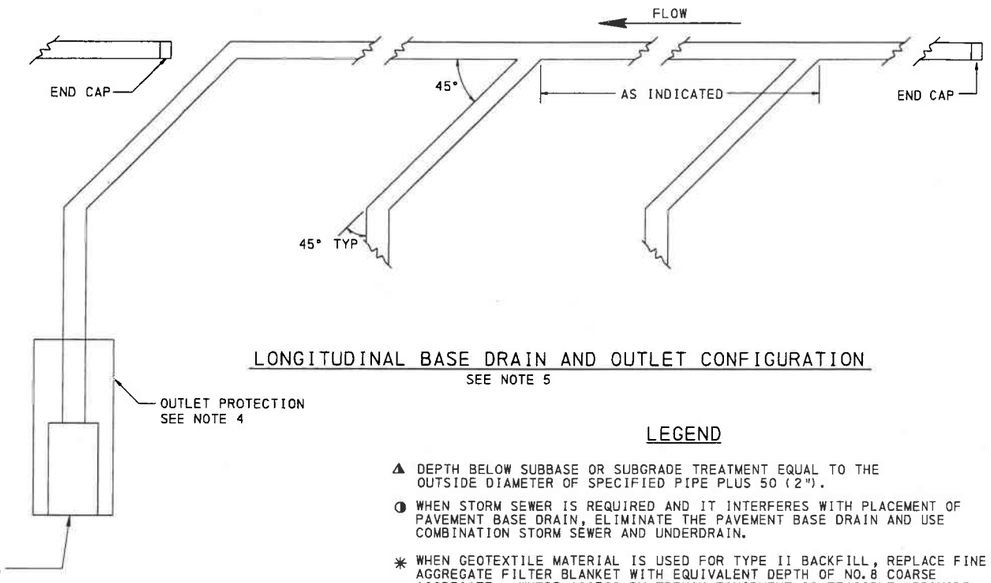

LONGITUDINAL BASE DRAIN AND OUTLET CONFIGURATION
SEE NOTE 5

LEGEND

▲ DEPTH BELOW SUBBASE OR SUBGRADE TREATMENT EQUAL TO THE OUTSIDE DIAMETER OF SPECIFIED PIPE PLUS 50 (2").

◑ WHEN STORM SEWER IS REQUIRED AND IT INTERFERES WITH PLACEMENT OF PAVEMENT BASE DRAIN, ELIMINATE THE PAVEMENT BASE DRAIN AND USE COMBINATION STORM SEWER AND UNDERDRAIN.

* WHEN GEOTEXTILE MATERIAL IS USED FOR TYPE II BACKFILL, REPLACE FINE AGGREGATE FILTER BLANKET WITH EQUIVALENT DEPTH OF NO. 8 COARSE AGGREGATE. WHERE ACCESS BY TRENCH EQUIPMENT IS FEASIBLE, PROVIDE TRENCH WIDTH EQUAL TO PIPE OUTSIDE DIAMETER PLUS 50 (2"), BUT NOT LESS THAN 150 (6"), WHEN GEOTEXTILE MATERIAL IS INDICATED.

‡ TYPE I OR TYPE II BACKFILL

D= SUBBASE DEPTH

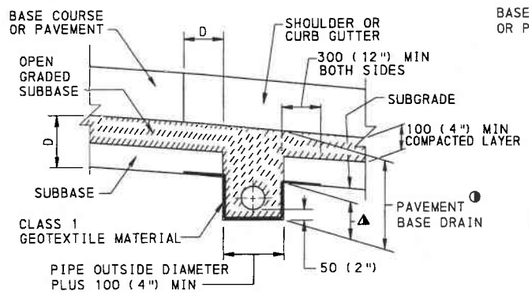

TYPICAL PLACEMENT
(OPEN GRADED SUBBASE)

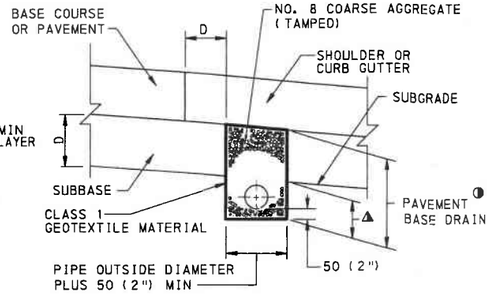

TYPICAL PLACEMENT
(STANDARD SUBBASE)

PAVEMENT BASE DRAIN

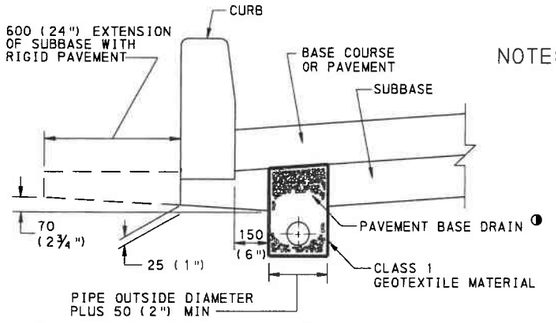

PLACEMENT AT CURB SECTION

NOTE: EITHER ALL METRIC OR ALL ENGLISH VALUES MUST BE USED ON PLANS. METRIC AND ENGLISH VALUES SHOWN MAY NOT BE MIXED.

COMMONWEALTH OF PENNSYLVANIA
DEPARTMENT OF TRANSPORTATION
BUREAU OF DESIGN

SUBSURFACE DRAINS

RECOMMENDED JUN. 1, 2010	RECOMMENDED JUN. 1, 2010	SHT 1 OF 5
CHIEF, HWY. QA DIVISION	DIRECTOR, BUREAU OF DESIGN	RC-30M

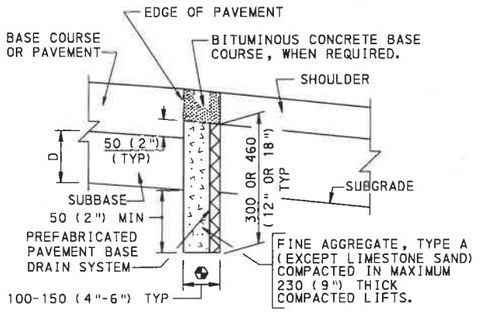

PREFABRICATED
PAVEMENT BASE DRAIN
(REHABILITATION)
SEE NOTE 3.

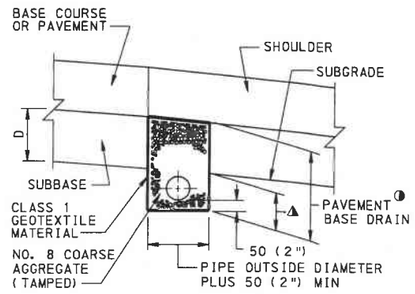

PAVEMENT BASE DRAIN
(REHABILITATION)

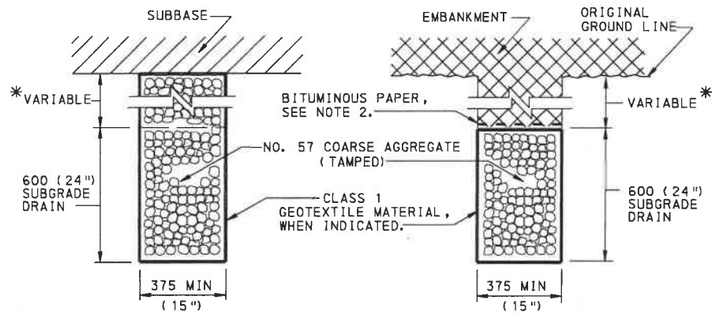

SUBGRADE DRAIN

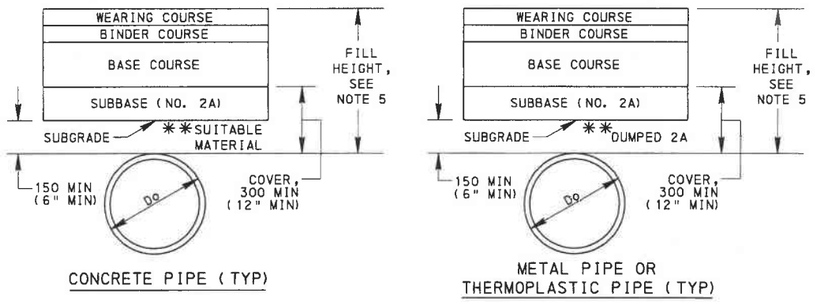

MINIMUM COVER OVER PIPE UNDER BITUMINOUS PAVEMENTS

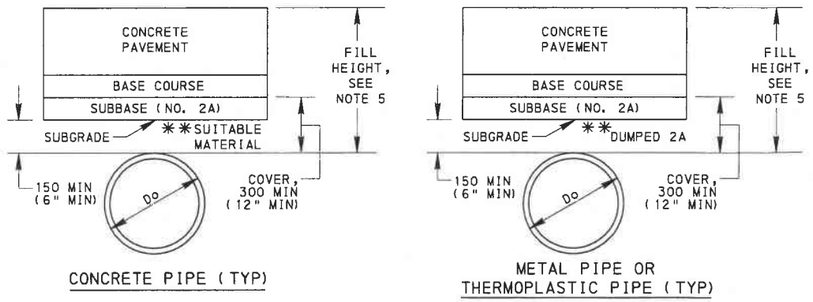

MINIMUM COVER OVER PIPE UNDER CONCRETE PAVEMENTS

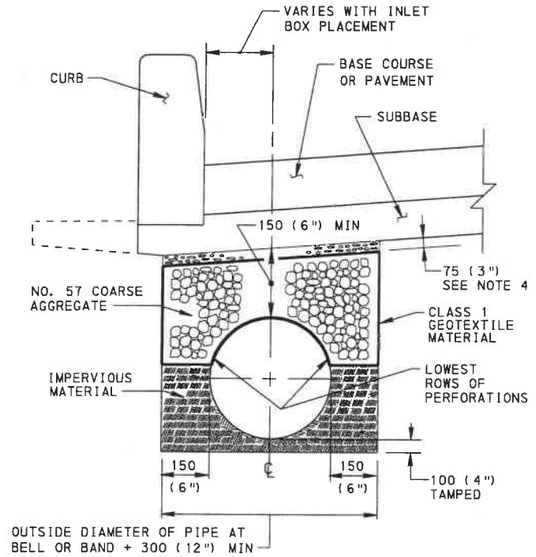

COMBINATION
STORM SEWER AND UNDERDRAIN

NOTE: PLACE NO. 57 COARSE AGGREGATE, TAMPED IN LAYERS 150 (6") THICK, STARTING AT THE LOWEST ROWS OF PERFORATIONS OR THE START OF THE OPEN JOINT. PLACE GROUPS OF PERFORATIONS OR THE OPEN JOINT (1/3 PIPE CIRCUMFERENCE) SYMMETRICALLY ABOUT THE VERTICAL CENTER LINE.

NOTES

1. PROVIDE MATERIALS AND CONSTRUCTION AS SPECIFIED IN PUBLICATION 408, SECTION 610 FOR PAVEMENT BASE DRAIN, SECTION 612 FOR SUBGRADE DRAINS, SECTION 604 FOR COMBINATION STORM SEWER AND UNDERDRAIN AND SECTION 601 FOR PIPE CULVERTS.
2. PROVIDE BITUMINOUS PAPER WHEN GEOTEXTILE MATERIAL IS NOT INDICATED.
3. PREFABRICATED PAVEMENT BASE DRAIN IS NOT RECOMMENDED UNDER CURBED SECTIONS AND ADJACENT TO WIDENED PAVEMENT.
4. PLACE 2A AGGREGATE MATERIAL, IN A LIFT 75 (3") THICK, COMPACT TO 95% SPD.
5. FOR MAXIMUM AND MINIMUM ALLOWABLE FILL HEIGHTS, REFER TO PUBLICATION 13M, DESIGN MANUAL, PART 2, CHAPTER 10, APPENDIX B (FILL HEIGHT TABLES FOR PIPES AND PIPE ARCHES).

LEGEND

Δ DEPTH BELOW SUBBASE EQUAL TO THE OUTSIDE DIAMETER OF SPECIFIED PIPE PLUS 50 (2").

◑ WHEN STORM SEWER IS REQUIRED AND IT INTERFERES WITH PLACEMENT OF PAVEMENT BASE DRAIN, ELIMINATE THE PAVEMENT BASE DRAIN AND USE COMBINATION STORM SEWER AND UNDERDRAIN.

D= SUBBASE DEPTH.

IF SLOUGHING OF THE SUBBASE MATERIAL FROM UNDER THE PAVEMENT IS OBSERVED DURING TRENCH EXCAVATION, COMPACT BACKFILL HYDRAULICALLY, AS DIRECTED BY THE ENGINEER.

◔ WIDTH IS EQUAL TO 75-125 (3"-5") OF BACKFILL AGGREGATE PLUS 25 (1") FOR THE PREFABRICATED BASE DRAIN.

* VARY TO MAINTAIN THE NECESSARY SUBGRADE SLOPE. CONSIDER ADDITIONAL AGGREGATE INCIDENTAL TO THE SUBGRADE DRAIN PAY ITEM.

** REFER TO SHEET 4 FOR PIPE INSTALLATION PROCEDURES, INCLUDING PLACEMENT AND COMPACTION REQUIREMENTS.

NOTE: EITHER ALL METRIC OR ALL ENGLISH VALUES MUST BE USED ON PLANS. METRIC AND ENGLISH VALUES SHOWN MAY NOT BE MIXED.

COMMONWEALTH OF PENNSYLVANIA
DEPARTMENT OF TRANSPORTATION
BUREAU OF DESIGN

SUBSURFACE DRAINS
PIPE PLACEMENT

RECOMMENDED JUN. 1, 2010	RECOMMENDED JUN. 1, 2010	SHT 2 OF 5
R. Wyatt Dilley	Bruce E. Thomas	RC-30M
CHIEF, HWY. QA DIVISION	DIRECTOR, BUREAU OF DESIGN	

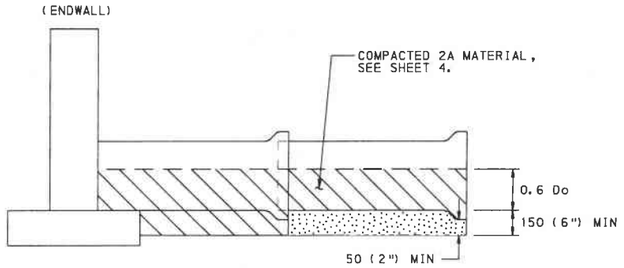

BACKFILL DETAIL AT ENDWALL

(FOR CONCRETE PIPE)

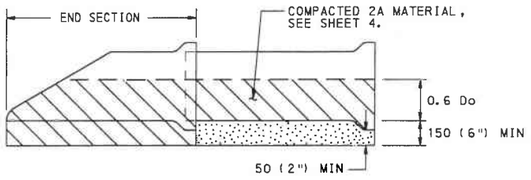

BACKFILL DETAIL AT END SECTION

(FOR CONCRETE PIPE)

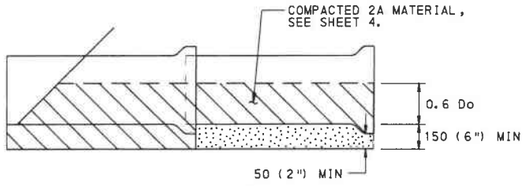

BACKFILL DETAIL AT LAST SECTION OF PIPE

(FOR CONCRETE PIPE)

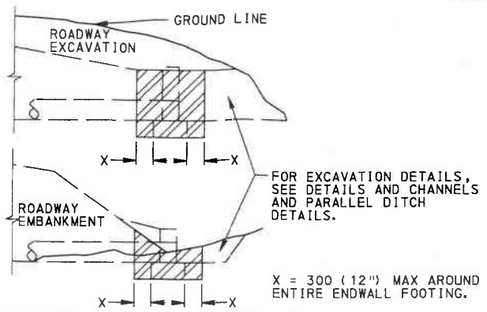

EXCAVATION FOR ENDWALLS

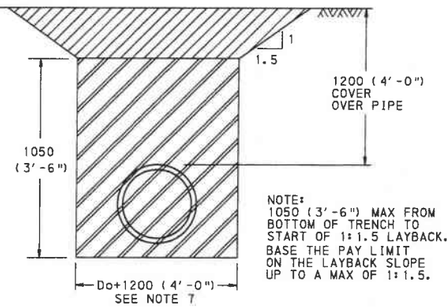

ABOVE DRAWING SHOWS EXCAVATION FOR PIPE IN CUT OR FILL WHERE SUBGRADE IS 1050 (3'-6") OR MORE ABOVE THE BOTTOM OF THE TRENCH.

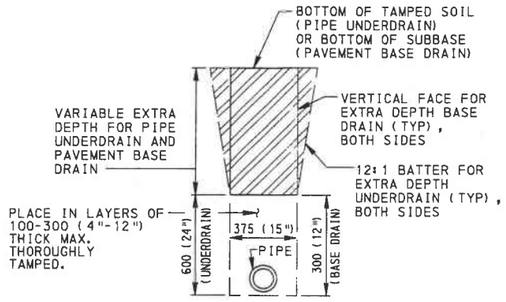

EXTRA DEPTH FOR PIPE UNDERDRAIN AND PAVEMENT BASE DRAIN

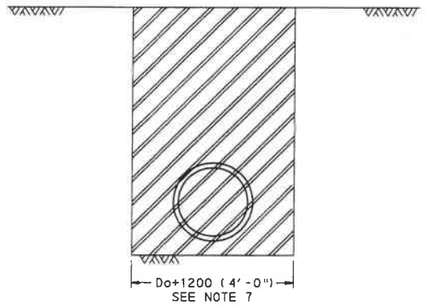

ABOVE DRAWING SHOWS EXCAVATION FOR PIPE IN CUT OR FILL WHERE SHORING OR A TRENCH BOX IS USED.

PAY LIMITS FOR PIPE EXCAVATION

NOTES

1. PROVIDE MATERIALS AND CONSTRUCT AS SPECIFIED IN PUBLICATION 408, SECTION 601 FOR PIPE CULVERTS, SECTION 602 FOR CORRUGATED METAL PIPE-ARCH CULVERTS AND SECTION 603 FOR METAL PLATE CULVERTS.
2. SHORING OR TRENCH BOX INSTALLATION FOR FLEXIBLE PIPE IS NOT NORMALLY USED. IF SHORING OR TRENCH BOX INSTALLATION IS PERMITTED IN SPECIAL CIRCUMSTANCES, REFER TO PUBLICATION 408, SECTION 601.3(g).
3. IN ALL EXCAVATION AREAS FOLLOW OSHA SAFETY REQUIREMENTS.
4. DO NOT COMPACT NO. 8 MATERIAL USED FOR BEDDING UNDER CONCRETE PIPES.
5. ALLOW NO PAYMENT FOR EXCAVATION IN EXCESS OF SPECIFIED LIMITS AND FOR ADDITIONAL BACKFILL MATERIAL REQUIRED.
6. PAYMENT FOR THE BACKFILL ENVELOPE, INCLUDING BEDDING, COARSE AGGREGATE AND SUITABLE MATERIAL UP TO 300 (12") ABOVE THE PIPE IS INCIDENTAL TO THE PIPE.
7. FOR BOTTOM TRENCH WIDTHS ≥ 2.5 m (8'-0"), ALL EXCAVATION IS CLASS 1.
8. FOR INLET OR OUTLET PROTECTION SEE DETAIL A.
9. CONSTRUCT FLEXIBLE BASE REPLACEMENT IN ACCORDANCE WITH THE REQUIREMENTS OF PUBLICATION 408, SECTION 316.
10. PREPARE EXPOSED VERTICAL AND HORIZONTAL SURFACES AS PER PUBLICATION 408, SECTION 409.3(K).
11. FOR NON-OVERLAY APPLICATIONS, THE TOP 40 (1½") OF BASE REPLACEMENT WILL BE SUPERPAVE WEARING COURSE.
12. FOR RESTORATION OF RIGID PAVEMENT, REFER TO PUBLICATION 408, SECTION 516 AND RC-26M.
13. FOR SUPERPAVE BASE REPLACEMENT, SAW CUTTING, EXCAVATION, HAULING AND DISPOSAL, BITUMINOUS TACK COAT, BITUMINOUS MATERIAL, AND SEALING OF THE JOINTS ARE CONSIDERED AS INCIDENTAL.
14. PERFORM AND COMPLETE PIPE RESTORATION WORK PRIOR TO THE FLEXIBLE SUPERPAVE BASE REPLACEMENT.

LEGEND

- CLASS 4 EXCAVATION
- CLASS 1 EXCAVATION
- AGGREGATE FOR BEDDING (AASHTO NO. 8)
- COARSE AGGREGATE (2A)

Do = OUTSIDE DIAMETER OF PIPE.

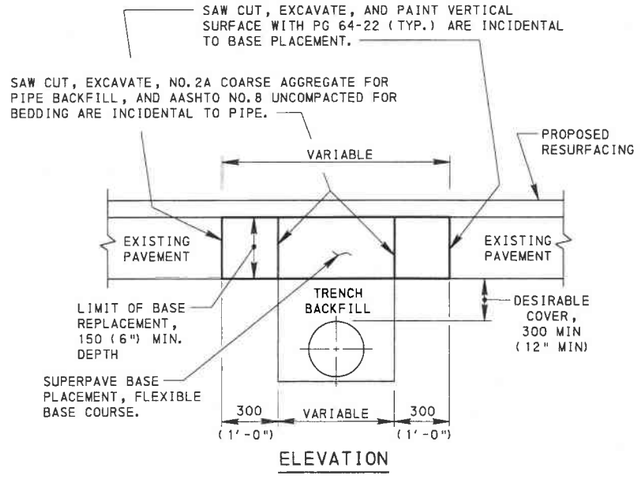

ELEVATION

RESTORATION OF PAVEMENT OVER PIPE

SEE NOTES 9, 10, 11, 12, 13 AND 14 THIS SHEET.

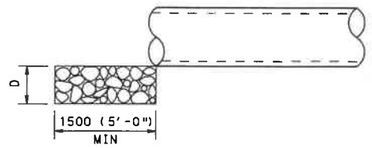

DETAIL A - PIPE INLET OR OUTLET PROTECTION

D = 450 (18"), R-4 ROCK, FOR PIPES LESS THAN 900 (36") INSIDE DIAMETER OR SPAN.
D = 600 (24"), R-5 ROCK, FOR PIPES 900 (36") AND GREATER INSIDE DIAMETER OR SPAN.

NOTE: EITHER ALL METRIC OR ALL ENGLISH VALUES MUST BE USED ON PLANS. METRIC AND ENGLISH VALUES SHOWN MAY NOT BE MIXED.

COMMONWEALTH OF PENNSYLVANIA
DEPARTMENT OF TRANSPORTATION
BUREAU OF DESIGN

SUBSURFACE DRAINS PIPE PLACEMENT EXCAVATION - BEDDING - BACKFILL

RECOMMENDED JUN. 1, 2010	RECOMMENDED JUN. 1, 2010	SHT 3 OF 5
R. Wyatt Dilley	Barry E. Hoover	RC-30M
CHIEF, HWY. QA DIVISION	DIRECTOR, BUREAU OF DESIGN	

PIPE INSTALLATION PROCEDURES

CONSTRUCTION DETAILS BELOW COVER THE FOLLOWING CONDITIONS:

(A) PIPE LYING ON TOP OF THE NATURAL GROUND, ROCK OR COMPACTED (97% SPD) FILL.

(B) THE EXISTING GROUND IS BETWEEN THE TOP AND THE BOTTOM OF THE PROPOSED PIPE AND THE PIPE IS TO BE COVERED WITH EARTH FILL.

(C) THE TOP OF PIPE IS BELOW THE LEVEL OF THE NATURAL GROUND OR COMPACTED FILL (TO MINIMUM 97% SPD) AND TO BE COVERED WITH EARTH FILL TO HEIGHTS ABOVE THE NATURAL GROUND.

STEP 1 : REMOVE TOPSOIL (COMPRESSIBLE LAYER OF ORGANIC MATERIAL) TO A WIDTH EQUAL TO 5 OUTSIDE DIAMETERS OF THE PIPE IN ALL FILL CONDITIONS ABOVE (A), (B) & (C). ALSO IF SPECIFIED ON THE CONTRACT DRAWING, UNDERCUT FOR THE DEPTH BELOW THE BEDDING AS SHOWN BY DESIGN (MAKE MIN WIDTH 5 DIAMETERS OF PIPE). PAY AS CLASS 1 EXCAVATION.

STEP 2 : CONSTRUCT THE EMBANKMENT TO 1200 (4'-0") ABOVE THE TOP OF PIPE OR TO THE SUBGRADE ELEVATION, WHICHEVER IS LESS. FOR PIPES 1800 (72") OR GREATER SEE NOTE 1.

STEP 3 : EXCAVATE THE TRENCH TO THE WIDTH OF THE OUTSIDE DIAMETER OF THE PIPE BARREL PLUS 1200 (4'-0") AND CREATE AN APPROPRIATE BEDDING 150 (6") DEEP.

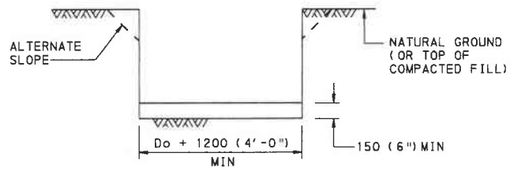

STEP 4 : FOR CONCRETE PIPE, IF THIS EXCAVATION IS THROUGH ROCK, OR HARD SHALE, OR IN AREAS OF UNDERCUT, PROVIDE 150+40 mm/m (6"+½" INCH/FT) OF Do+1200 (4'-0"), BELOW THE INTENDED BOTTOM ELEVATION OF THE PIPE, 400 (16") MAX.

NOTE: IF UNSUITABLE MATERIAL IS FOUND, UNDERCUT AS DIRECTED AND BACKFILL WITH SUITABLE MATERIAL TO BOTTOM OF BEDDING ELEVATION. (UNLESS OTHERWISE SPECIFIED.)

STEP 5 : LAY PIPE ON APPROPRIATE BEDDING. SEE STEP 6D FOR METAL PIPE ARCH AND METAL PLATE PIPE ARCH.

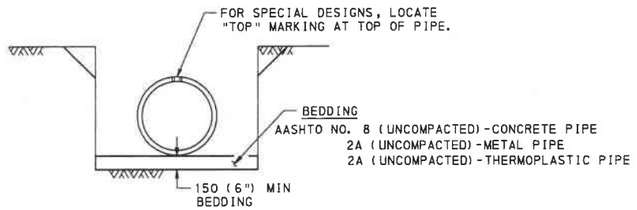

STEP 6 : FOR CONCRETE PIPE, SEE STEP 6A.
: FOR METAL PIPE AND METAL PLATE PIPE, SEE STEP 6B.
: FOR THERMOPLASTIC PIPE, SEE STEP 6C.
: FOR METAL PIPE ARCH AND METAL PLATE PIPE ARCH, SEE STEP 6D.

STEP 6A : CONCRETE PIPE

PLACE 2A COARSE AGGREGATE MATERIAL, IN LIFTS 100 (4") THICK, ADJACENT TO THE LOWER HAUNCHES TO A HEIGHT OF 0.6 Do. COMPACT TO 95% SPD. TEST THE SIDE BACKFILL MATERIAL AND CONTINUE EMBANKMENT IN ACCORDANCE WITH PUBLICATION 408, SECTION 601.

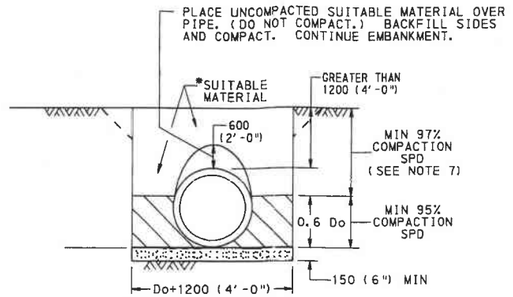

GREATER THAN 1.2 m (4') TO 14.6 m (48')

FOR FILLS OVER 14.6 m (48'), SEE NOTE 8.

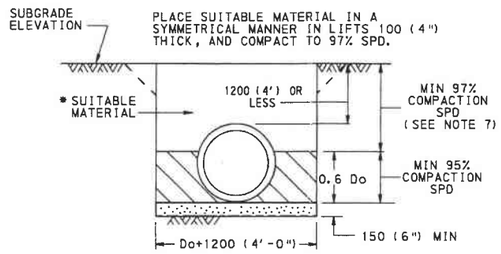

SHALLOW FILLS 1200 (4'-0") AND LESS

STEP 6B : METAL PIPE AND METAL PLATE PIPE

PLACE 2A COARSE AGGREGATE MATERIAL, IN LIFTS 100 (4") THICK, ADJACENT TO THE LOWER HAUNCHES TO A HEIGHT OF 300 (12") ABOVE TOP OF PIPE. COMPACT TO 95% SPD. TEST THE BACKFILL MATERIAL AND CONTINUE EMBANKMENT IN ACCORDANCE WITH PUBLICATION 408, SECTION 601.

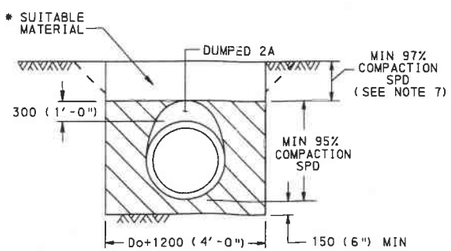

STEP 6C: THERMOPLASTIC PIPE

PLACE 2A COARSE AGGREGATE MATERIAL, IN LIFTS 100 (4") THICK, ADJACENT TO THE LOWER HAUNCHES TO A HEIGHT OF 300 (12") ABOVE TOP OF PIPE. COMPACT TO 95% SPD. TEST THE BACKFILL MATERIAL AND CONTINUE EMBANKMENT IN ACCORDANCE WITH PUBLICATION 408, SECTION 601.

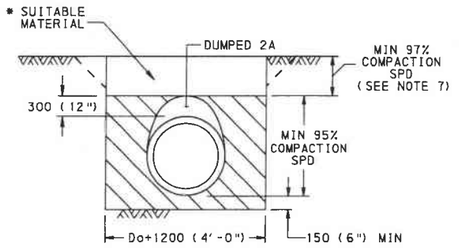

STEP 6D : METAL PIPE ARCH AND METAL PLATE PIPE ARCH

(1) PLACE 2A COARSE AGGREGATE MATERIAL (0.15 x RISE) ON TOP OF THE BEDDING AND FORM THE CRADLE.

(2) LAY THE PIPE ON THE PREPARED CRADLE.

(3) PLACE 2A COARSE AGGREGATE MATERIAL, IN LIFTS 100 (4") THICK, ADJACENT TO THE LOWER HAUNCHES TO A HEIGHT OF 300 (12") ABOVE TOP OF PIPE. COMPACT TO 95% SPD. TEST THE BACKFILL MATERIAL AND CONTINUE EMBANKMENT IN ACCORDANCE WITH PUBLICATION 408, SECTION 601.

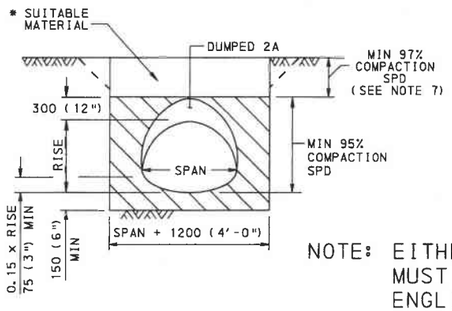

NOTE: EITHER ALL METRIC OR ALL ENGLISH VALUES MUST BE USED ON PLANS. METRIC AND ENGLISH VALUES SHOWN MAY NOT BE MIXED.

NOTES

1. THE INSTALLATION OF PIPES 1800 (72") OR GREATER INSIDE DIAMETER OR SPAN IS PERMITTED WITHOUT PLACING EMBANKMENT FIRST. MAKE THE BACKFILL ENVELOPE AS SHOWN ON THIS DRAWING EXCEPT PROVIDE 2A MATERIAL ON EACH SIDE OF THE PIPE EQUAL TO ONE OUTSIDE DIAMETER OR SPAN OF THE PIPE. FOR CONCRETE PIPE, THE WIDTH OF UNCOMPACTED AGGREGATE FOR BEDDING (AASHTO NO. 8) REMAINS AT Do + 1200 (4'-0"). PAYMENT FOR THE 2A MATERIAL IS AS PER NOTE 3.
2. A HIGHER STRENGTH PIPE THAN SPECIFIED MAY BE SUPPLIED AT NO ADDITIONAL COST TO THE DEPARTMENT.
3. PAYMENT FOR THE BACKFILL ENVELOPE INCLUDING BEDDING, COARSE AGGREGATE AND SUITABLE MATERIAL UP TO 300 (12") ABOVE THE PIPE IS INCIDENTAL TO THE PIPE.
4. TO PRECLUDE POINT LOADING ON RELATIVELY RIGID CONCRETE PIPE, DO NOT COMPACT AASHTO NO. 8 BEDDING MATERIAL.
5. FOR TRENCH BOX/SHORING INSTALLATION REQUIREMENTS REFER TO PUBLICATION 408, SECTION 601.
6. PERMIT PLACEMENT OF BACKFILL MATERIAL IN LAYERS, LIFTS, 200 (8") THICK WHEN USING VIBRATORY COMPACTION EQUIPMENT.
7. COMPACT TOP 1000 (3'-0") OF SUBGRADE TO 100% IN ACCORDANCE WITH PUBLICATION 408, SECTION 206.3.
8. FOR REINFORCED CONCRETE PIPES INSTALLED WITH GREATER THAN 14.6 m (48') OF FILL, PROVIDE 300 (12") BEDDING MINIMUM AND 400 (16") WHEN ROCK IS PRESENT.

LEGEND

AGGREGATE FOR BEDDING (AASHTO NO. 8), UNCOMPACTED

COARSE AGGREGATE (2A)

Do = OUTSIDE DIAMETER OF PIPE, MILLIMETERS (INCHES)

SPD = STANDARD PROCTOR DENSITY

ID = INSIDE DIAMETER

* SUITABLE MATERIAL = MATERIAL CONTAINING NO DEBRIS, ORGANIC MATTER, FROZEN MATERIAL OR LARGE STONES WITH A DIAMETER GREATER THAN ONE-HALF THE THICKNESS OF THE COMPACTED LAYERS BEING PLACED.

COMMONWEALTH OF PENNSYLVANIA
DEPARTMENT OF TRANSPORTATION
BUREAU OF DESIGN

SUBSURFACE DRAINS
PIPE PLACEMENT
EXCAVATION - BEDDING - BACKFILL

RECOMMENDED JUN. 1, 2010	RECOMMENDED JUN. 1, 2010	SHT 4 OF 5
R. Wade Willy CHIEF, HWY. QA DIVISION	Bruce E. Thomas DIRECTOR, BUREAU OF DESIGN	RC-30M

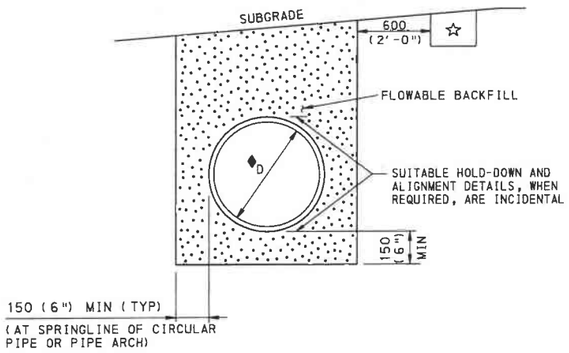

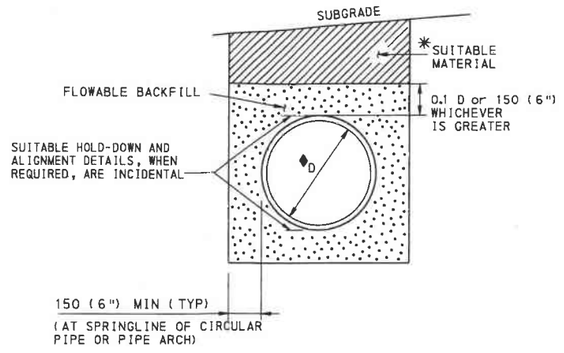

D = NOMINAL DIAMETER OR RISE IN DESCRIPTION OF PIPE ITEM. 900 mm (3'-0") MAXIMUM DIAMETER OR RISE.

FLOWABLE BACKFILL DETAIL

(SEE NOTE 4)

NOTES

1. PROVIDE MATERIALS AND WORKMANSHIP IN ACCORDANCE WITH THE REQUIREMENTS OF PUBLICATION 408, SECTIONS 601 AND 220.
2. FLOWABLE BACKFILL WILL ENVELOP THE LAST SECTION OF PIPE OR END SECTION. CONSTRUCT DIKE OF FLOWABLE BACKFILL MATERIAL AS SPECIFIED IN SPECIAL PROVISION OR PROVIDE FORMWORK TO CONTAIN FLOWABLE BACKFILL.
3. PAYMENT FOR THE BACKFILL ENVELOPE (AGGREGATE, BEDDING AND BACKFILL OR FLOWABLE BACKFILL MATERIAL) AND SUITABLE MATERIAL UP TO 300 (12") ABOVE THE PIPE IS INCIDENTAL TO THE PIPE.
4. THE FLOWABLE BACKFILL DETAIL REPLACES STEPS 6A, 6B, 6C AND 6D ON SHEET 4 WHEN FLOWABLE BACKFILL IS SPECIFIED.

☆ IF DRAINAGE IS REQUIRED TO MAINTAIN POSITIVE FLOW OF WATER AWAY FROM THE TRENCH, IT MUST BE PROVIDED BY USE OF PROPERLY DESIGNED GRANULAR OR SYNTHETIC DRAINS.

✱ SUITABLE MATERIAL = MATERIAL CONTAINING NO DEBRIS, ORGANIC MATTER, FROZEN MATERIAL OR LARGE STONES WITH A DIAMETER GREATER THAN ONE-HALF THE THICKNESS OF THE COMPACTED LAYERS BEING PLACED.

NOTE: EITHER ALL METRIC OR ALL ENGLISH VALUES MUST BE USED ON PLANS. METRIC AND ENGLISH VALUES SHOWN MAY NOT BE MIXED.

COMMONWEALTH OF PENNSYLVANIA
DEPARTMENT OF TRANSPORTATION
BUREAU OF DESIGN

SUBSURFACE DRAINS

FLOWABLE BACKFILL

RECOMMENDED JUN. 1, 2010	RECOMMENDED JUN. 1, 2010	SHT 5 OF 5
CHIEF, HWY. QA DIVISION	DIRECTOR, BUREAU OF DESIGN	RC-30M

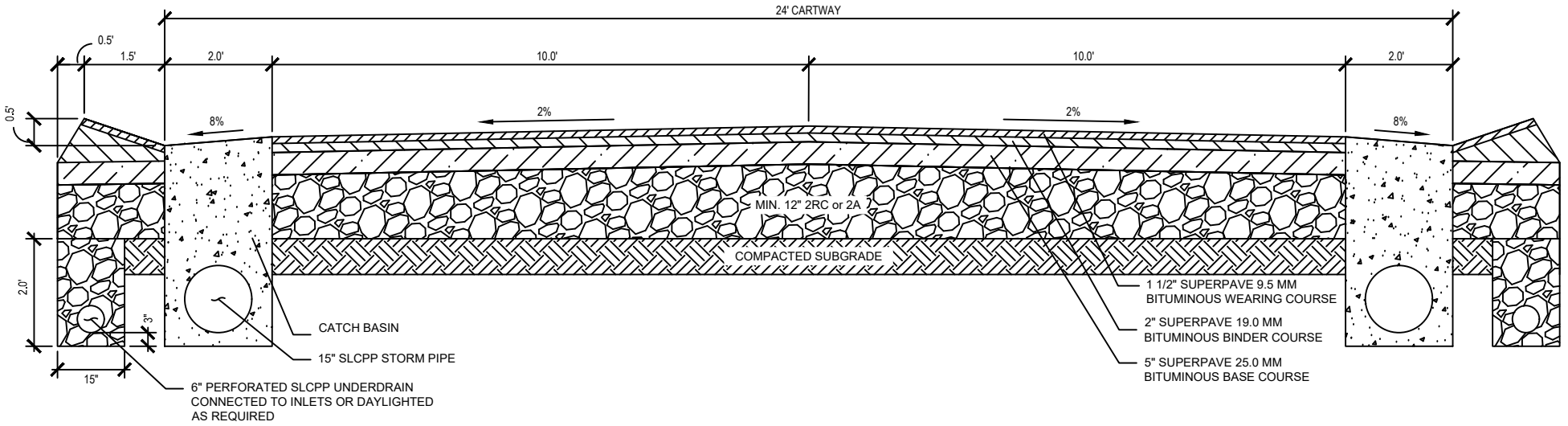

ROADWAY FLEXIBLE PAVING DETAIL

NTS

harshman
CE GROUP, LLC

100 COURSON HILL ROAD
WASHINGTON, PA 15301-3267
T: 724.503.4125
F: 724.229.8255

Union Township Engineering

Typical Local Road Profile

Union Township, Washington County, PA

PROJECT NO.:	15.044.00
DATE:	10/02/2019
SCALE:	NTS
DRN. BY:	J.B.
CHECKED BY:	J.H.
DRAWING NO.:	15.044.00-R1
SHEET NUMBER	1 OF 1